EUROJET Turbo GmbH
Lilienthalstrasse 2b
85399 Hallbergmoos
Germany

Phone: +49 8 11 55 05–0
Fax: +49 8 11 55 05–139

E-Mail: EJ200@eurojet.de
Web: www.eurojet.de

EUROJET
Power. Precision. Performance.

EJ200

SUPERIOR MILITARY TURBOFAN

Power. Precision. Performance. These three driving principles have formed the backbone of the ground-breaking technology evident in the EJ200 military engine.

Partnership. This is what EUROJET stands for. A partnership of four European nations' industry partners who brought together their unique expertise to create the company responsible for the management of the development, production, support and export of the EJ200. The cooperation of these four market leaders in the aero-engine industry has resulted in the world's most advanced military turbofan in its class.

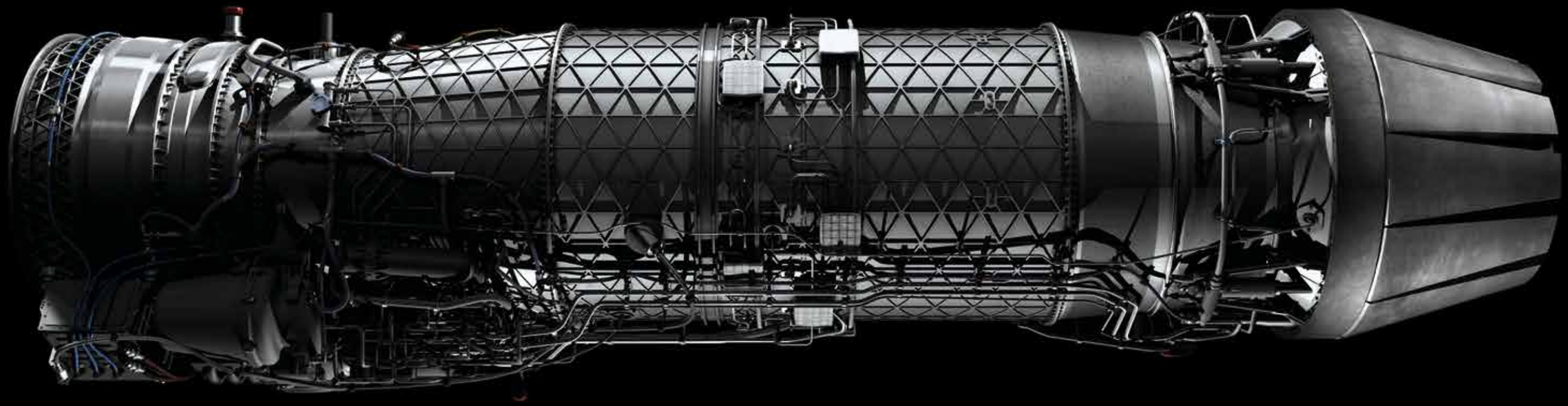

COMPANY PROFILE

EUROJET Turbo GmbH was formed in the mid-1980's as a result of the decision of the governments of the UK, Germany, Spain and Italy to issue a development contract for the engine system of what would eventually become known as the Eurofighter Typhoon fighter aircraft. EUROJET was set up to be the single interface for all EJ200 engine activities. After successful completion of the development phase, EUROJET was awarded the production contract in 1998 and has since gone on to coordinate the production, in-service support and export of the EJ200 from its headquarters in Hallbergmoos, Germany (located close to Munich airport).

The EJ200 programme, together with the Eurofighter Typhoon programme, represents around 100,000 direct and indirect jobs across Europe and involves over 400 companies. This constitutes Europe's largest industrial programme representing a direct commitment by partner nations and companies for investment in sustainable technology and furthering the industrial potential of the European aero-engine industry.

THE POWER OF COOPERATION

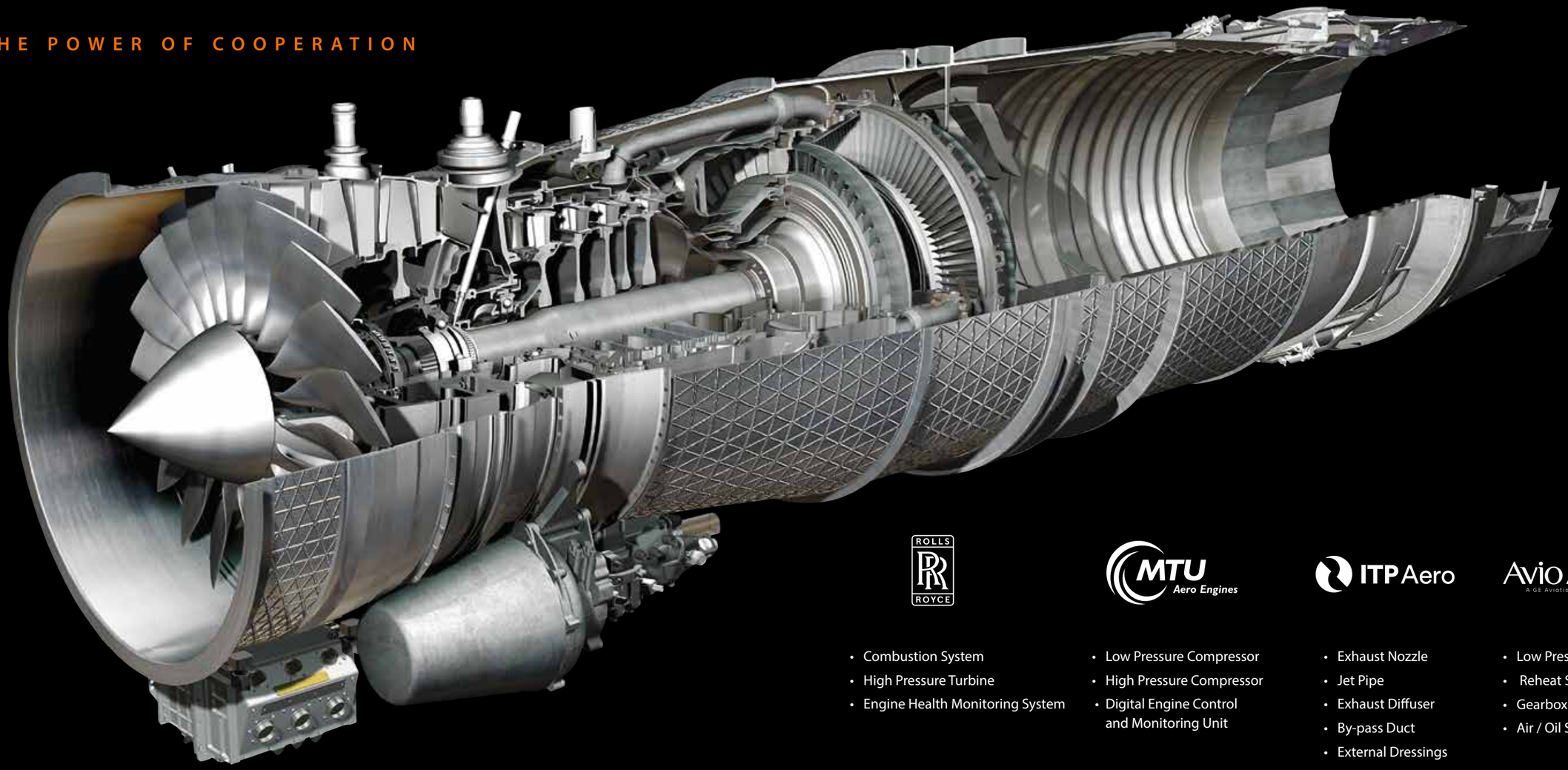

ROLLS ROYCE

- Combustion System
- High Pressure Turbine
- Engine Health Monitoring System

MTU Aero Engines

- Low Pressure Compressor
- High Pressure Compressor
- Digital Engine Control and Monitoring Unit

ITP Aero

- Exhaust Nozzle
- Jet Pipe
- Exhaust Diffuser
- By-pass Duct
- External Dressings

Avio Aero A GE Aviation Business

- Low Pressure Turbine
- Reheat System
- Gearbox
- Air / Oil System

THE EJ200 ADVANCED MODULAR CONCEPT

The EJ200 Engine is composed of 15 fully interchangeable modules. All modules are independently maintainable, which enables quick engine recovery by module exchange. Seven modules can be exchanged without conducting an uninstalled engine test (as indicated*).

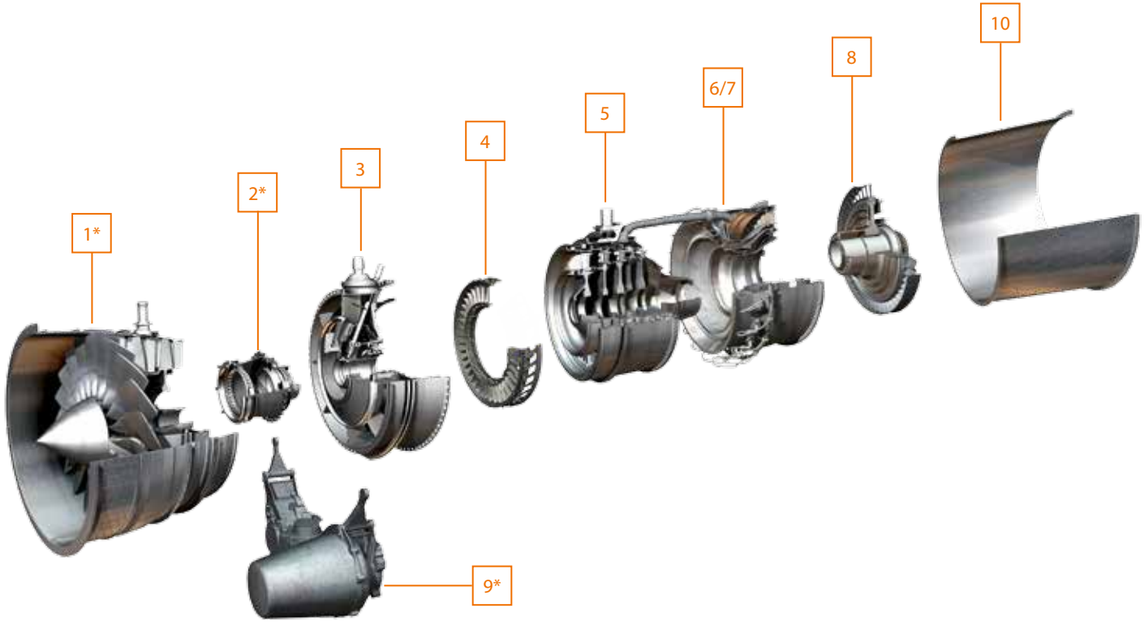

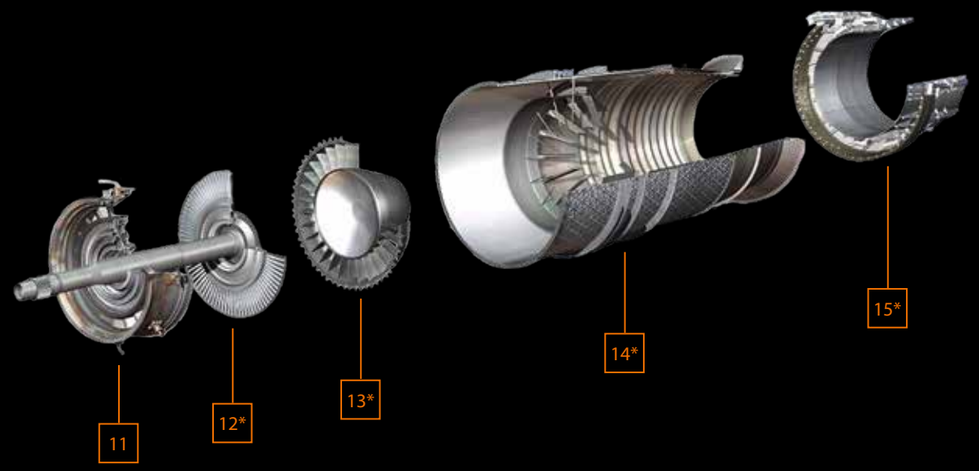

1. LP Compressor*
2. Front Bearing Support*
3. Intermediate Casing
4. Variable Inlet Guide Vanes
5. HP Compressor

6/7. Combustion Casing and Combustor (Combi-module)

8. HP Turbine
9. Gearbox*
10. Bypass Duct
11. LP Stator
12. LP Rotor*
13. Turbine Exit Casing*
14. Afterburner*
15. Variable Exhaust Nozzle*

ENGINE STATISTICS

Type	Twin Spool Turbofan with Afterburner
Application	Eurofighter Typhoon
Thrust	90 kN (20,000 lbf) with reheat | 60 kN (13,500 lbf) without reheat
Bypass ratio	0.4 : 1
Fan pressure ratio	4.2 : 1
Overall pressure ratio	26 : 1
Specific fuel consumption	47 – 49 g/kNs with reheat | 21 – 23 g/kNs without reheat
Airflow	75 – 77 kg/s
Compressor stages	3 LP, 5 HP
Turbine stages	1 HP, 1 LP
Combustion system	Annular Airspray
Weight	ca. 1,000 kg
Length	ca. 4 m

WHAT THE EJ200 ALREADY INCORPORATES THAT NO OTHER 20,000 LB ENGINE HAS YET:

- Full Blisk technology in the LP Compressor and in 3 stages of the HP Compressor resulting in optimised weight and increased safety
- Advanced Compressor Blade design for optimised efficiency and unparalleled bird-strike resistance
- Advanced combustion design with high durability and optimised fuel burn
- Single crystal turbines with 3D Aero giving significant life increase and optimal performance
- Executive Lifing, allowing maximum use of the 6,000 EFH design life (over 20,000 TACs)
- A combined unit for Control and Monitoring resulting in optimised health monitoring and maintenance
- 3-Stage Reheat System for optimised fuel burn and thrust

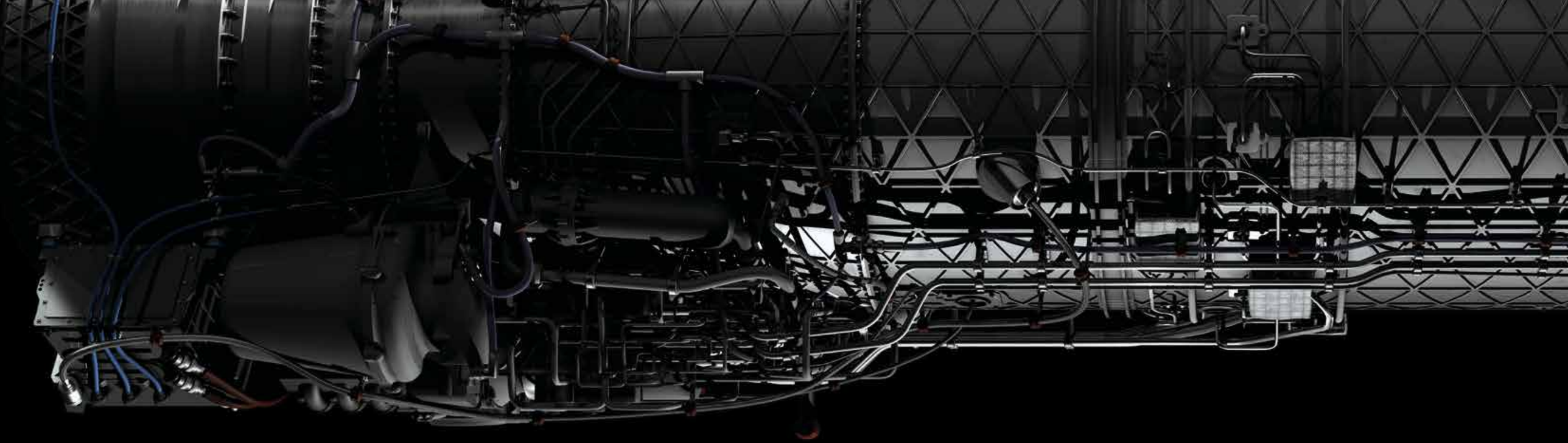

CUTTING-EDGE INNOVATION AND TECHNOLOGY

The EJ200 is designed to fulfil the most demanding requirements of today's fighter aircraft, delivering a high thrust-to-weight ratio combined with simple engine architecture. The design of the engine allows for maximum availability and minimum operating costs throughout the life of the weapon system.

The EJ200 is a two-spool gas turbine engine with modular design. The wide-chord fan with integrally bladed discs (blisks) is light and aerodynamically efficient and possesses a high level of resistance to foreign object damage. The advanced aerodynamics employed in the fan allows optimum operation without the need for inlet guide vanes.

Both the low pressure compressor (3 stages) and high pressure compressor (5 stages) are driven by single-stage advanced air-cooled turbines, featuring the latest single crystal blade technology and operating at temperatures which are 300° Kelvin above those of previous generation engines. Engine brush seals are widely used rather than labyrinth seals in the air system. The annular combustor, incorporating air spray fuel injectors, has been designed for extremely low smoke and emission levels.

The reheat system features radial hot stream burners, independent cold stream burning and the engine features a hydraulically operated convergent/divergent nozzle.

All accessories, including the DECMU (FADEC), are self-contained and engine mounted. The gearbox provides drive for accessories. The engine is designed for a life of 6,000 flying hours which corresponds to approximately 30 years of operation.

WHAT MAKES THE EJ200 AFFORDABLE TO OPERATE?

There are a number of factors that play into the decision to purchase an engine, of which the original purchase price is just one. To be cost efficient an engine needs to be considered over its entire Life Cycle, its operating costs, maintenance, the number of hours the engine is flying and its life span. In this, the EJ200 has a significant lead on other engines as it is designed to minimise costs in a number of areas and allows for a maximum time on wing.

WHERE THE EJ200 CAN OFFER SIGNIFICANT LIFE CYCLE COST SAVINGS:

- Maximum time on wing is provided through the exceptionally high reliability of the engine which has proven to be better than the original specification requirement
- The consequent application of an on-condition maintenance concept reduces the O Level maintenance burden to a minimum
- An engine removal decision is based on boroscope inspection and the advice of the fully automated 'on board health and monitoring system' only. Engine exchange can be completed within 45 minutes
- The repair effort off wing is efficient and can be performed with a very short turnaround time due to the modular construction which enables rapid repair by module exchange
- The facility costs on the Main Operating Base (MOB) are minimised as a result of the highly efficient I Level maintenance concept
- As seven modules can be exchanged without consequential bench test requirement, a cost-effective maintenance concept can be implemented making the requirement for an engine test bed on the Main Operating Base redundant
- The design, low turnaround times and the proposed advanced maintenance concept results in low quantity pool requirements of spares, whether parts, modules or complete engines
- The maintenance concept optimises personnel requirements in terms of air force/industry head count and training requirements
- Administration costs can be reduced significantly as the proposed maintenance concept supports any form of cooperation between air forces and local industry

TAILORED GROWTH FOR CUSTOMER NEEDS

In essence, the growth requirements for an engine are mostly related to achieving increased thrust. There are a number of different factors that can influence the way thrust growth is achieved depending on the level of growth and the relevant portion of the flight envelope.

In defining an optimised growth engine, it is beneficial to tailor these measures to the individual needs of the application. EUROJET is prepared to define the requirements in close liaison with the airframe manufacturer to achieve an optimised thrust growth for the application and the customer.

Over the past few years, EUROJET and partner companies have continued to work on technologies for growth opportunities addressing various EJ200 components. Rig and component testing has been performed to achieve a maturity level which allows technology insertion at low risk. Prominent examples are the 2D and 3D thrust vectoring nozzles, where full-scale engine tests have been successfully performed.

Until now, the EJ200 programme has not required any growth steps due to the engine's unprecedented performance. Therefore, the full growth potential, designed into the engine from the beginning, is still available to be exploited.

THE POWER TO MEET FUTURE CHALLENGES

The outstanding capabilities of the EJ200, and its unprecedented performance as demonstrated by the Eurofighter Typhoon aircraft, have raised the interest of many nations. With an already strong international presence, EUROJET continues to focus on further enhancing its customer base.

In pursuing growth opportunities for the EJ200 engine, EUROJET continues its commitment to improve the EJ200 engine and to deliver quality and reliability. We aim to make the EJ200 yet more attractive to customers by advances in areas such as maintenance and life cycle cost reduction, while drawing the most out of the inherent capabilities embedded within the engine design in accordance with the aircraft and customer requirements.

The EJ200 and EUROJET: Partnering your long-term defence strategy.